PTC-0183 SERIES

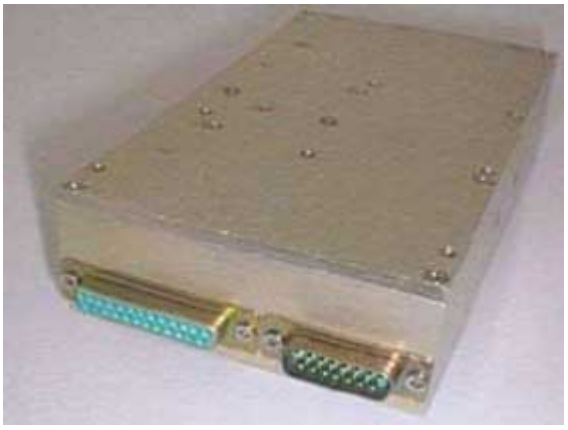

AC/DC CONVERTERS

MINIATURE, HIGH DENSITY
HIGH EFFICIENCY
SINGLE OUTPUT
1000W

APPLICATIONS

Military, Ruggedized, Telecom, Industrial

SPECIAL FEATURES

- Miniature size
- High efficiency
- Wide input range
- Input / Output isolation
- Fixed switching frequency (400KHz)
- Logic Inhibit
- EMI/RFI filters included
- Indefinite short circuit protection with auto-recovery
- Over temperature shutdown with auto-recovery

ENVIRONMENTAL

Meets or exceeds MIL-STD-810D

Temperature:
Operating -55°C to +85°C (baseplate)
Storage -55°C to +125°C

RELIABILITY

150'000 hours, calculated per MIL-STD-217F at +85°C baseplate, ground fixed.

ELECTRICAL SPECIFICATIONS

AC INPUT

AC input range: 115 ±15%VAC, 400Hz, 3-Phase

Efficiency: up to 90%

EMI/RFI:
Design to meet or exceed MIL-STD-461D
CE102, CS101, CS114, CS115, CS116
RE101, RE102, RS101, RS103

Input Transient Protection:
Meets or exceeds MIL-STD-704A

Isolation:
500V between Input and Output
500V between Input and Case

DC OUTPUT (floating)

Line /load regulation:
Less than 1% (no load to full load, -55°C to +85°C)

Ripple and noise: 150mVp-p, typical (max. 1%)

Current limiting (FoldBack):
Continuous protection for unlimited time

Passive transzorb on outputs.

Over temperature protection:
Shutdown at baseplate temperature of +105°C (±5°C)
Automatic recovery at baseplate temperature lower than +95°C (±5°C)

Isolation:
500V between Output and Input
100V between Output and Case

PTC
Production & Trading Company AG
Gewerbestrasse 9, P.O. Box, CH-6330 Cham, Switzerland
phone 041 740 4554, fax 041 740 4664, http://www.ptcag.ch, e-mail: ptc@bluewin.ch

Copyright©2013 P.T.C. AG. All Rights Reserved.

SELECTION GUIDE

Model	Input	Output	Maximum Load	Regulation	RIPPLE (20MHz BW)
PTC-0183-03	80 to 140 VAC	48 VDC	20 A	± 1%	280 mVp-p
PTC-0183-04	80 to 140 VAC	60 VDC	10.8 A	± 1%	280 mVp-p
PTC-0183-010	80 to 140 VAC	28 VDC	36 A	± 1%	280 mVp-p

PIN ASSIGNMENT (INPUT)

Pin No.	Pin Function
1	N.C.
2	PHASE C
3	N.C.
4	PHASE B
5	PHASE B
6	N.C.
7	PHASE A
8	N.C.

Pin No.	Pin Function
9	PHASE C
10	PHASE C
11	N.C.
12	PHASE B
13	N.C.
14	PHASE A
15	PHASE A

PIN ASSIGNMENT (OUTPUT)

Pin No.	Pin Function
1	+SENSE
2	- SENSE
3	INHIBIT
4	+OUT 28V
5	+OUT 28V
6	+OUT 28V
7	+OUT 28V
8	+OUT 28V
9	- OUT 28V
10	- OUT 28V

Pin No.	Pin Function
11	- OUT 28V
12	- OUT 28V
13	- OUT 28V
14	+OUT 28V
15	+OUT 28V
16	+OUT 28V
17	+OUT 28V
18	+OUT 28V
19	+OUT 28V
20	- OUT 28V

Pin No.	Pin Function
21	- OUT 28V
22	- OUT 28V
23	- OUT 28V
24	- OUT 28V
25	- OUT 28V

* Specifications are subject to change without prior notice by the manufacturer.

Copyright©2013 P.T.C. AG. All Rights Reserved.

PTC
Production & Trading Company AG
Gewerbestrasse 9, P.O. Box, CH-6330 Cham, Switzerland
phone 041 740 4554, fax 041 740 4664, http://www.ptcag.ch, e-mail: ptc@bluewin.ch

OUTLINE DRAWING

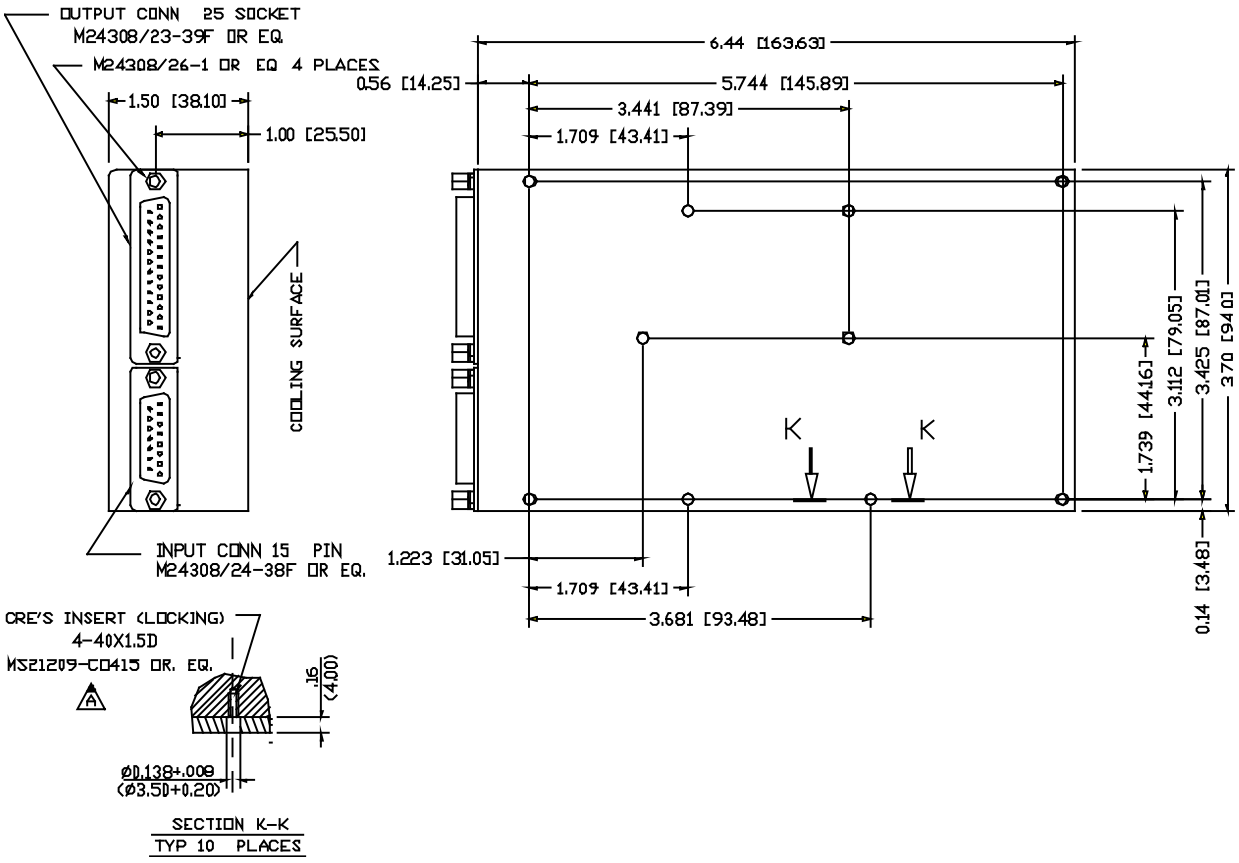

Notes

1. Dimensions are in Inches [mm]
2. Tolerance is:
   .XX ±.02 IN
   .XXX ±.01 IN
3. Weight: 37.4 lb (1075gr)

*Specifications are subject to change without prior notice by the manufacturer

Copyright©2013 P.T.C. AG. All Rights Reserved.

PTC
Production & Trading Company AG
Gewerbestrasse 9, P.O. Box, CH-6330 Cham, Switzerland
phone 041 740 4554, fax 041 740 4664, http://www.ptcag.ch, e-mail: ptc@bluewin.ch